TOUCHSCREENS

INFORMATION

Practical and cost-effective 19” touchscreen monitor for commercial and industrial environments

The ProLite T1931SR-B2S is designed for workplaces where touch interaction needs to be simple, reliable and practical. Its 5-wire resistive touch technology responds to almost any suitable input method, including a finger, glove, stylus or pen-like tool. This makes it ideal for environments where users work quickly, wear gloves or need dependable touch operation without relying on bare fingers.

With its IP54-rated front surface, the display is protected against dust and splashing water from the front, making it a strong choice for retail counters, restaurants, workshops, warehouses and light industrial applications.

The monitor also offers flexible analogue and digital inputs with USB touch support for easy integration. An adjustable ergonomic stand and integrated cable management help create a clean, comfortable and professional workspace.

Responsive touch for demanding environments

Resistive touch technology supports input via a finger, a gloved hand, a stylus or other suitable tools. Its durable design makes it a practical choice for a wide range of environments, from retail to restaurants or other applications where a smooth touch experience is

Reliable where conditions get tough

IP54 protection helps the monitor withstand dusty conditions and splashing water from the front, making it suitable for more demanding environments.

Comfortable and versatile use

The single-hinge stand allows smooth screen adjustment for comfortable, versatile use - with built-in cable management to keep your workspace neat.

Enjoy clear, immersive sound

Deliver clear, impactful audio directly from your monitor. Ideal for grabbing attention.

SPECIFICATION

01 DISPLAY CHARACTERISTICS

Diagonal	19", 48cm
Panel	IPS
Native resolution	1280 x 1024 (1.3 megapixel)
Aspect ratio	5:4
Panel brightness	250 cd/m²
Brightness	195 cd/m² with touch
Light transmittance	77%
Static contrast	1000:1 with touch
Response time (GTG)	14ms
Viewing zone	horizontal/vertical: 178°/178°, right/left: 89°/89°, up/down: 89°/89°
Colour support	16.7mln
Horizontal Sync	31.5 - 80kHz
Viewable area W x H	374.8 x 299.8mm, 14.7 x 11.8"
Pixel pitch	0.293mm
Bezel colour and finish	black, matte

02 TOUCH

Touch technology	serial resistive
Touch points	1
Touch method	stylus, finger, glove, glove (latex)
Touch interface	USB
Supported operating systems	All iiyama monitors are Plug & Play and compatible with Windows and Linux. For details regarding the supported OS for the touch models, please refer to the driver instruction file available in the downloads section.

03 INTERFACES / CONNECTORS / CONTROLS

Analog signal input	VGA x1
Digital signal input	HDMI x1 DisplayPort x1
Audio input	Mini jack x1
Audio output	Speakers 2 x 1W
HDCP	yes

04 FEATURES

Extra	anti-glare treatment
Water and dust protection	IP54 (front)
OSD key lock	yes

05 GENERAL

OSD languages	EN, DE, FR, ES, IT, CN, JP, TW
Control buttons	Menu, Scroll up/ Brightness, Scroll down/ Mute, Select, Power
User controls	contrast, brightness, lock mode (power, OSD), auto adjust, OSD, H. position, V. position, H-size, fine, OSD H. position, OSD V. position, OSD timeout, reset, input select, OSD language, colour temperature, volume, mute
Convenience	Kensington-lock™ prepared
Plug&Play	DDC2B

06 MECHANICAL

Orientation	landscape, face-up
Tilt angle	90° up; 5° down
VESA mounting	100 x 100mm
Cable management system	yes
MTBF	50000 hours

07 ACCESSORIES INCLUDED

Cables	power (1.8m), USB (1.8m), HDMI (1.8m), Audio (1.8m), DP (1.8m)
Guides	quick start guide, safety guide
Other	Screwdriver
Cable cover	yes

08 POWER MANAGEMENT

Power supply unit	internal
Power supply	AC 100 - 240V, 50/60Hz
Power usage	20W typical, 1.5W stand by, 0.3W off mode

09 SUSTAINABILITY

Regulations	CE, EAC, RoHS support, ErP, WEEE, cULus, VCCI, REACH, UKCA
Energy efficiency class (Regulation (EU) 2017/1369)	E
REACH SVHC	above 0.1%: Lead, Lead monoxide (lead oxide)

10 DIMENSIONS / WEIGHT

Product dimensions W x H x D	432 x 432 x 240mm
Box dimensions W x H x D	530 x 495 x 190mm
Weight (without box)	6kg
Weight (with box)	8kg

EAN code 4948570127757

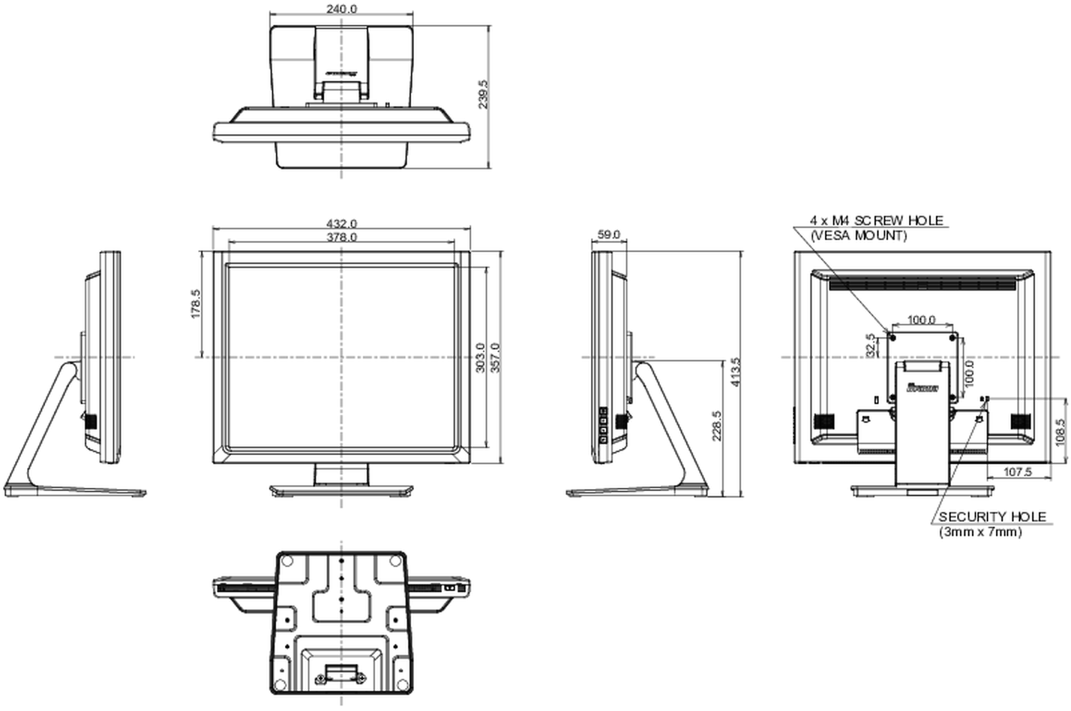

GALLERY

All trademarks and registered trademarks acknowledged. E & O E. Specification subject to change without notice. All LCD's comply with ISO-9241-307:2008 in connection with pixel defects. **© IIYAMA CORPORATION. ALL RIGHTS RESERVED**