TOUCHSCREENS

INFORMATION

19’’ 10pt touchscreen monitor featuring IPS panel technology and edge-to-edge glass design

Built for intuitive interaction, the ProLite T1932MSC-B2S touchscreen monitor combines precise touch response, durable glass protection and clear image quality in one practical display. Whether used for customer-facing applications, point-of-sale systems, information desks or everyday professional work, it offers a smooth and natural touch experience that feels familiar from the first use.

The screen delivers sharp, colourful visuals with wide viewing angles thanks to its IPS panel technology. Its tough scratch-resistant glass surface and front-facing IP54 protection against dust and water splashes make it suitable for frequent use, helping the display stay reliable in demanding, even industrial environments.

A stable, adjustable stand allows flexible positioning, making the monitor easy to adapt to different users and setups. Finished with a sleek edge-to-edge glass design, it brings a modern, professional appearance to any interactive workspace.

FEATURES

Smooth touch for demanding environments

PCAP touch technology supports input via finger, latex glove or stylus. Its robust design makes it a practical choice for a wide range of environments, from retail to catering or other applications where a smooth touch experience is required.

Reliable where conditions get tough

IP54 protection helps the monitor withstand dusty conditions and splashing water from the front, making it suitable for more demanding environments.

Comfortable and versatile use

The single-hinge stand allows smooth screen adjustment for comfortable, versatile use - with built-in cable management to keep your workspace neat.

Enjoy clear, immersive sound

Deliver clear, impactful audio directly from your monitor. Ideal for grabbing attention.

SPECIFICATION

01 DISPLAY CHARACTERISTICS

Design	Edge to edge glass
Diagonal	19", 48cm
Panel	IPS
Native resolution	1280 x 1024 (1.3 megapixel)
Aspect ratio	5:4
Panel brightness	250 cd/m²
Brightness	225 cd/m² with touch
Light transmittance	90%
Static contrast	1000:1 with touch
Response time (GTG)	14ms
Viewing zone	horizontal/vertical: 178°/178°, right/left: 89°/89°, up/down: 89°/89°
Colour support	16.7mln
Horizontal Sync	31 - 80kHz
Viewable area W x H	375 x 300mm, 14.7 x 11.8"
Pixel pitch	0.293mm
Bezel colour and finish	black, matte

02 TOUCH

Touch technology	projective capacitive
Touch points	10 (HID, only with supported OS)
Touch method	stylus, finger, glove
Touch interface	USB
Supported operating systems	All iiyama monitors are Plug & Play and compatible with Windows and Linux. For details regarding the supported OS for the touch models, please refer to the driver instruction file available in the downloads section.

03 INTERFACES / CONNECTORS / CONTROLS

Analog signal input	VGA x1
Digital signal input	HDMI x1 DisplayPort x1
Audio input	Mini jack x1
Audio output	Speakers 2 x 1W
HDCP	yes

04 FEATURES

Water and dust protection	IP54 (front)

OSD key lock	yes

05 GENERAL

OSD languages	EN, DE, FR, ES, IT, CN, JP, TW
Control buttons	Menu, Scroll up/ Brightness, Scroll down/ Mute, Select, Power
User controls	Picture (contrast, brightness, H.position, V.position, phase, clock, auto adjust), advanced (color temp., sharpness), OSD (timeout, position, H-position, V-position), option (reset, language, source select, display mode, volume, factory)
Convenience	Kensington-lock™ prepared
Plug&Play	DDC2B

06 MECHANICAL

Orientation	landscape, face-up
Tilt angle	90° up; 5° down
VESA mounting	100 x 100mm
Cable management system	yes
MTBF	50000 hours

07 ACCESSORIES INCLUDED

Cables	power (1.8m), USB (1.8m), HDMI (1.8m), Audio (1.8m), DP (1.8m)
Guides	quick start guide, safety guide
Other	Screwdriver
Cable cover	yes

08 POWER MANAGEMENT

Power supply unit	internal
Power supply	AC 100 - 240V, 50/60Hz
Power usage	20W typical, 1.5W stand by, 0.3W off mode

09 SUSTAINABILITY

Regulations	CE, EAC, RoHS support, ErP, WEEE, cULus, REACH, UKCA
Energy efficiency class (Regulation (EU) 2017/1369)	E
REACH SVHC	above 0.1%: Lead, Lead monoxide (lead oxide)

10 DIMENSIONS / WEIGHT

Product dimensions W x H x D	432 x 413.5 x 239.5mm

Box dimensions W x H x D	530 x 495 x 190mm
Weight (without box)	5.4kg
Weight (with box)	7.4kg
EAN code	4948570127771

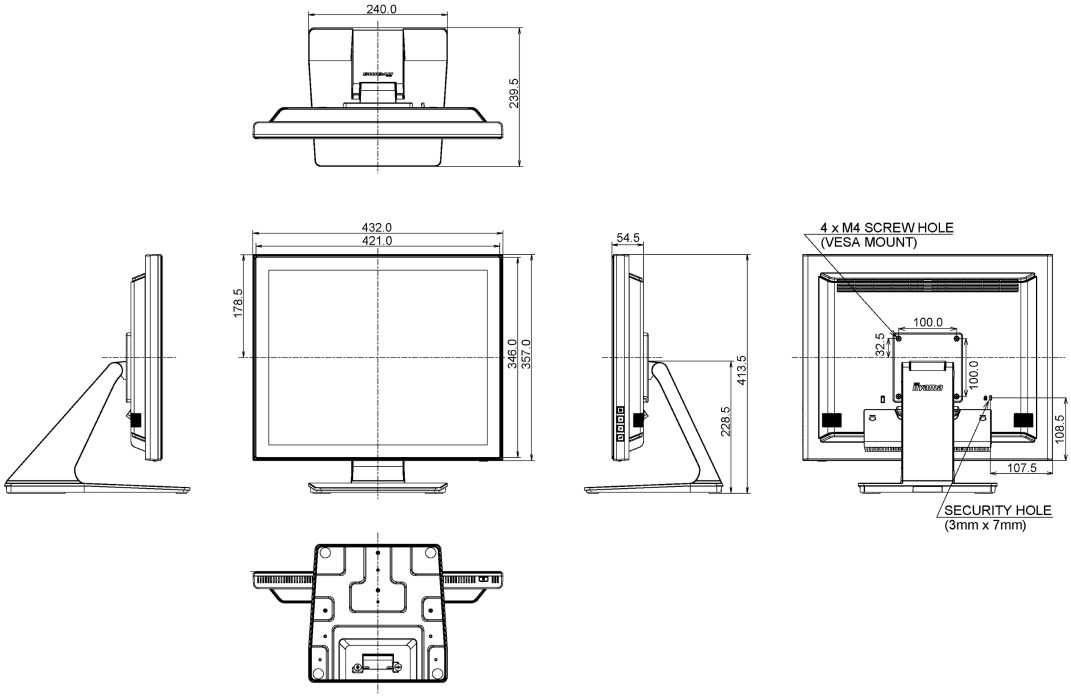

GALLERY

iiyama
ProLite
T1932MSC
19"
TOUCH

iiyama
ProLite
T1932MSC
19"
TOUCH

iiyama
ProLite
T1932MSC
19"
TOUCH

iiyama
ProLite
T1932MSC
19"
TOUCH

iiyama
ProLite
T1932MSC
19"
TOUCH

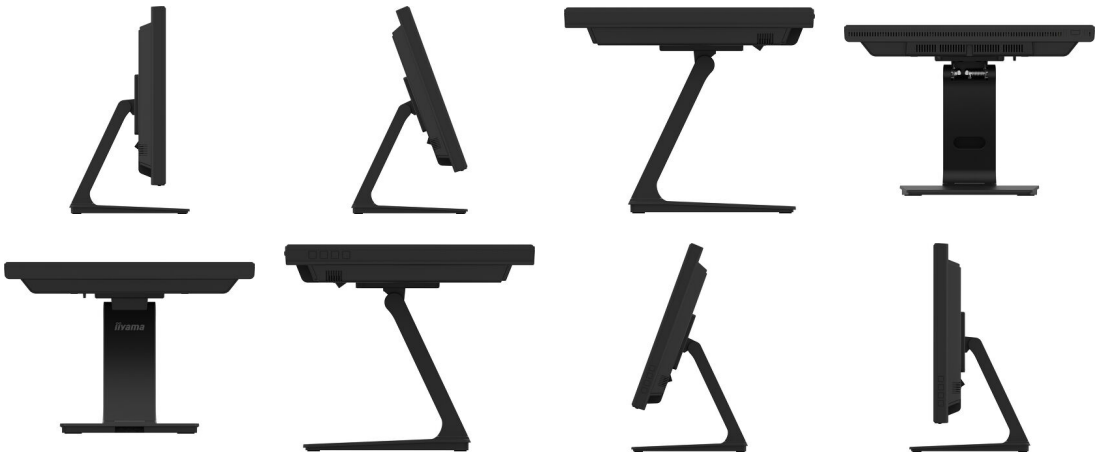

All trademarks and registered trademarks acknowledged. E & O E. Specification subject to change without notice. All LCD's comply with ISO-9241-307:2008 in connection with pixel defects. **© IIYAMA CORPORATION. ALL RIGHTS RESERVED**